TRAINMAN GP15-1 DIESEL LOCO N SCALE

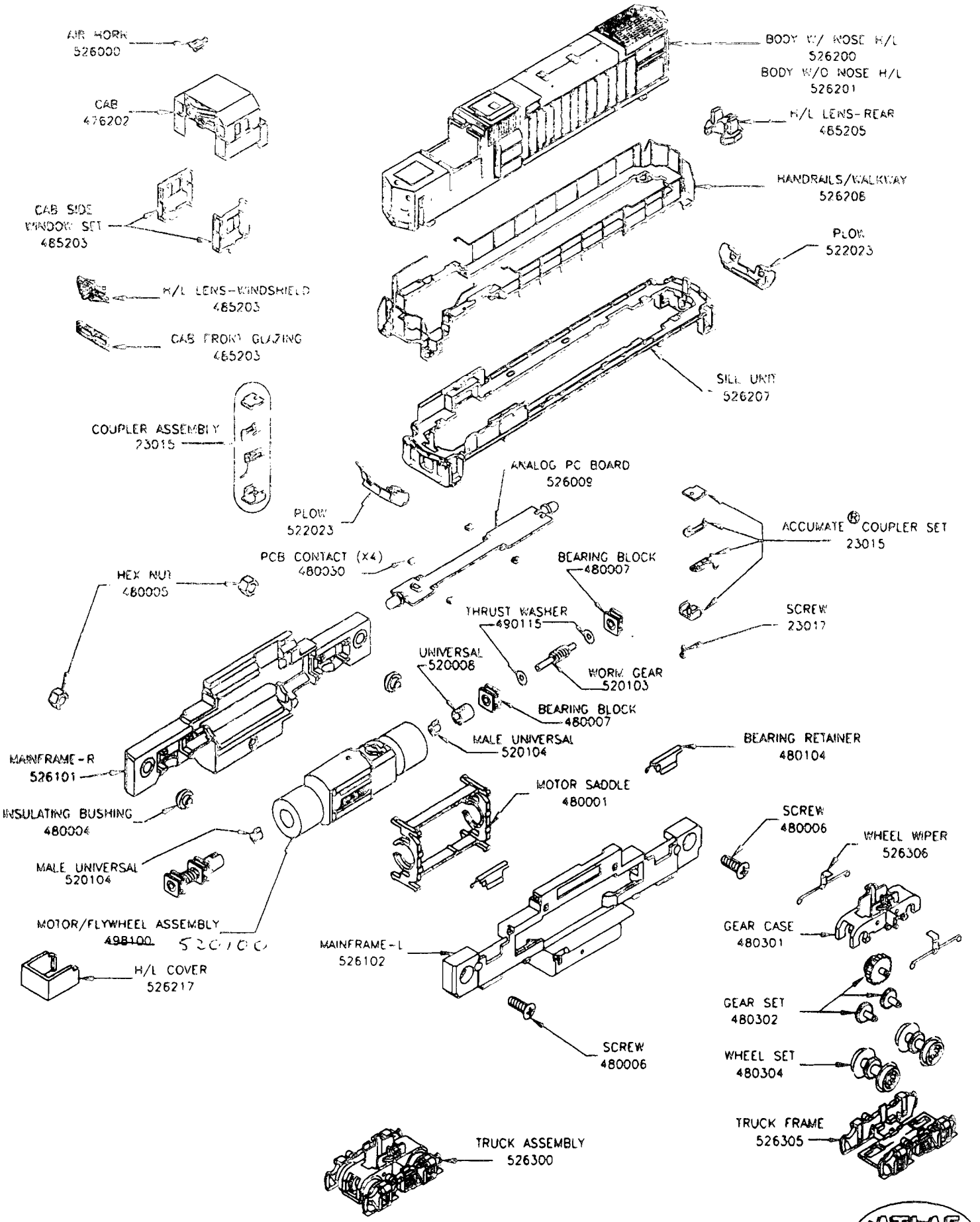

Atlas Model Railroad Co., Inc. • 378 Florence Ave. • Hillside, NJ 07205 • U.S.A.

2629-P101