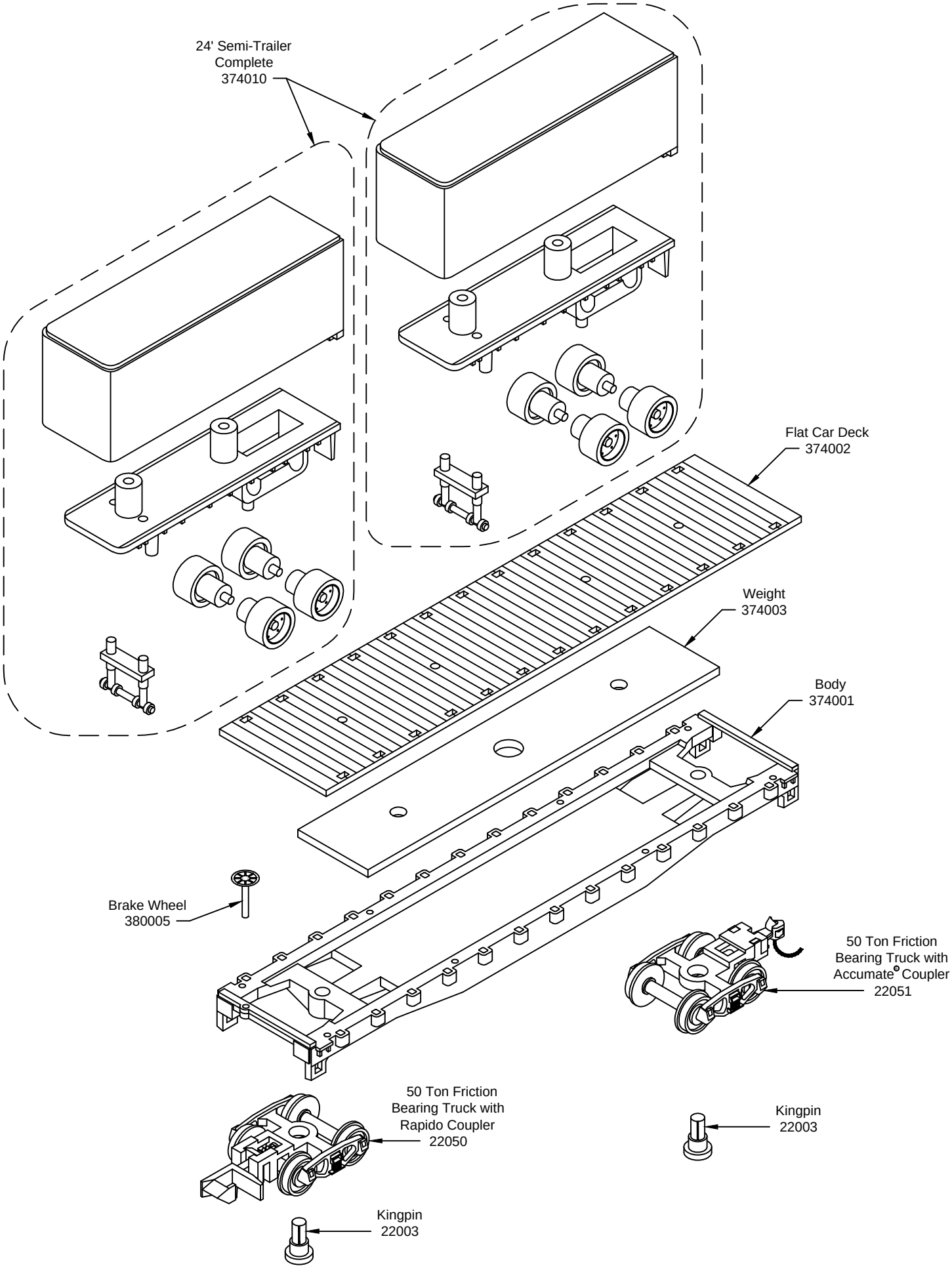#3740 SERIES - N PIGGYBACK FLAT W/ 2 24' TRAILERS