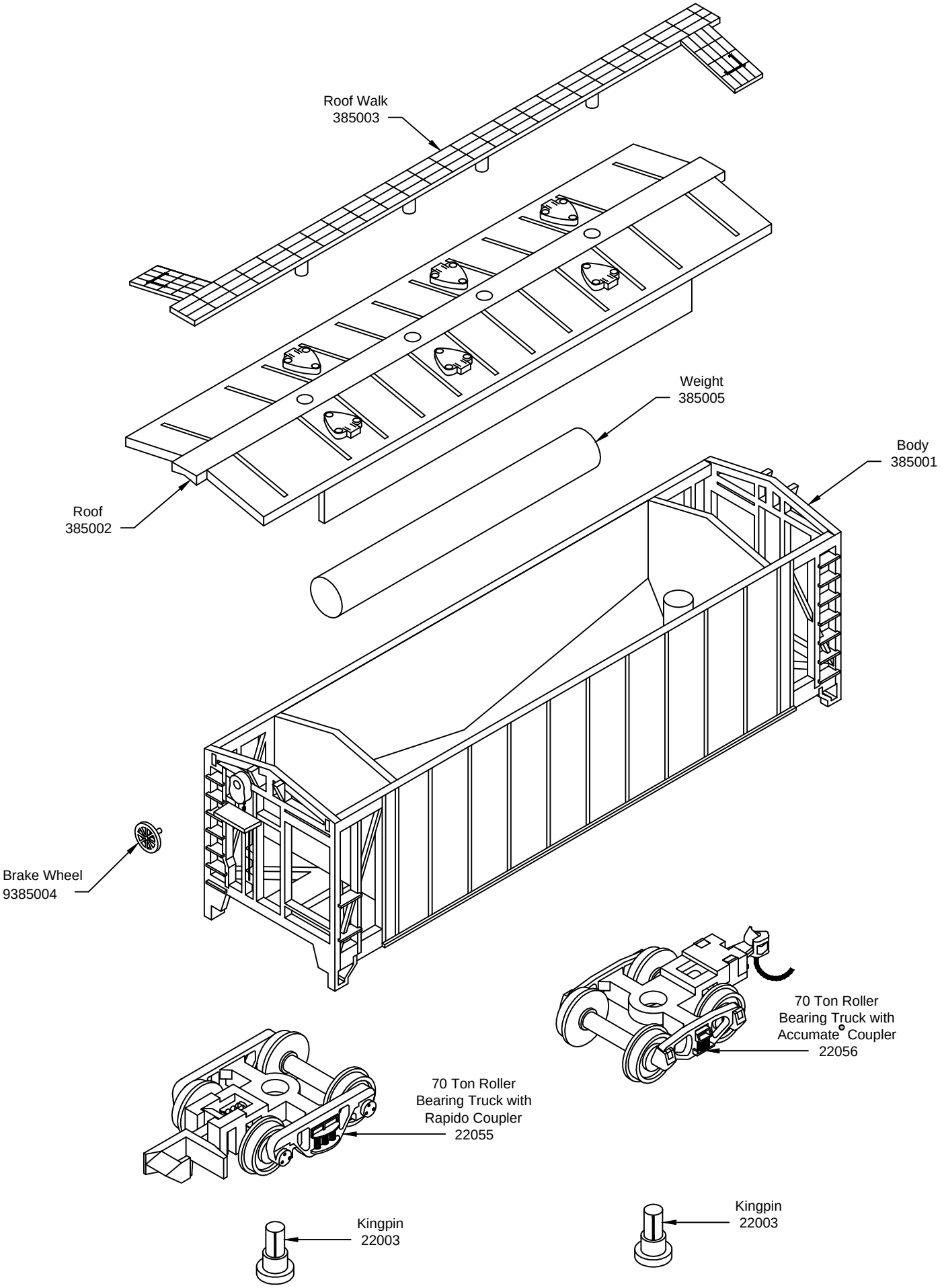#3850 SERIES - N GATX 40' AIRSLIDE