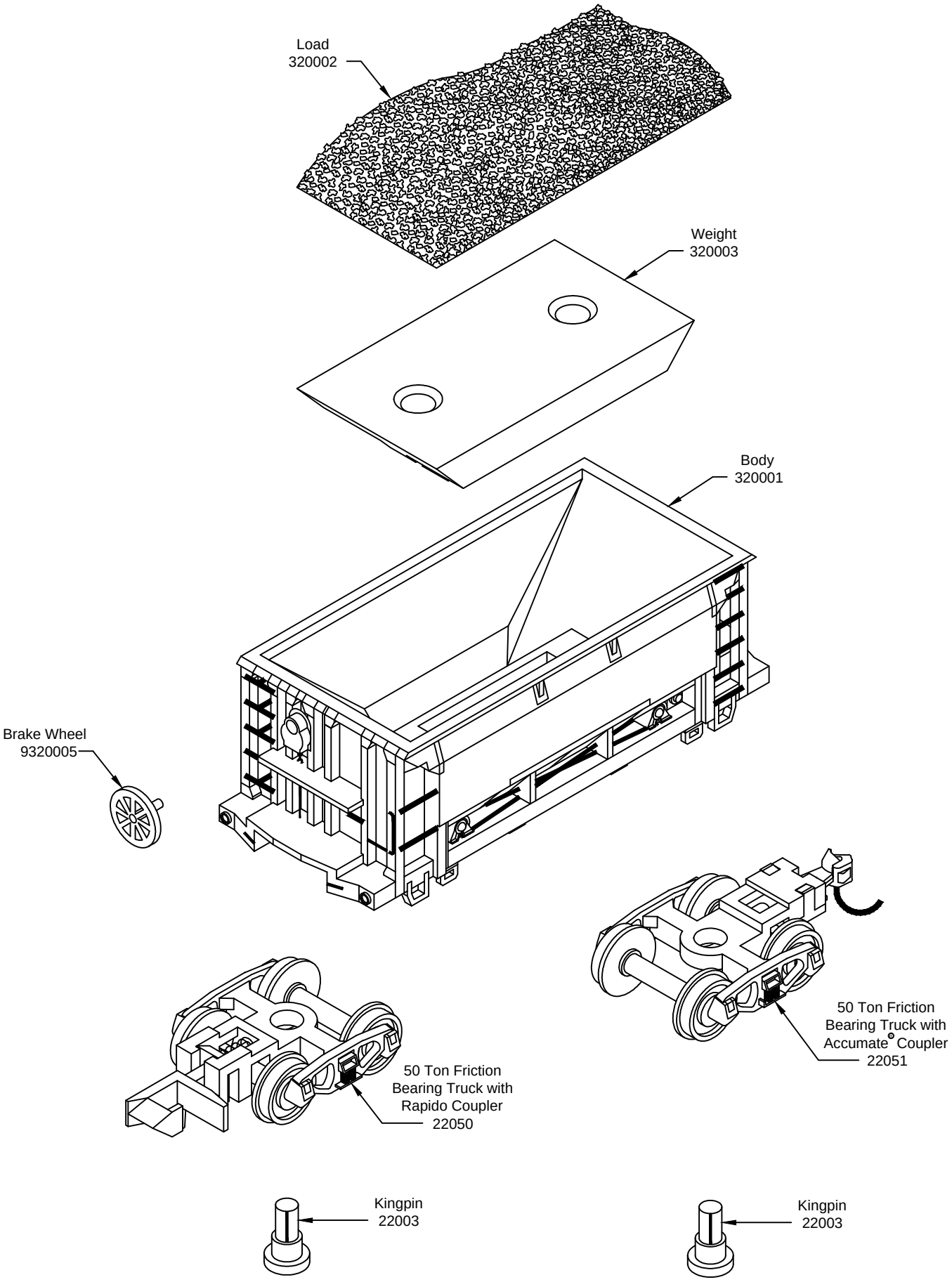#3200 SERIES - N ORE CAR WITH LOAD