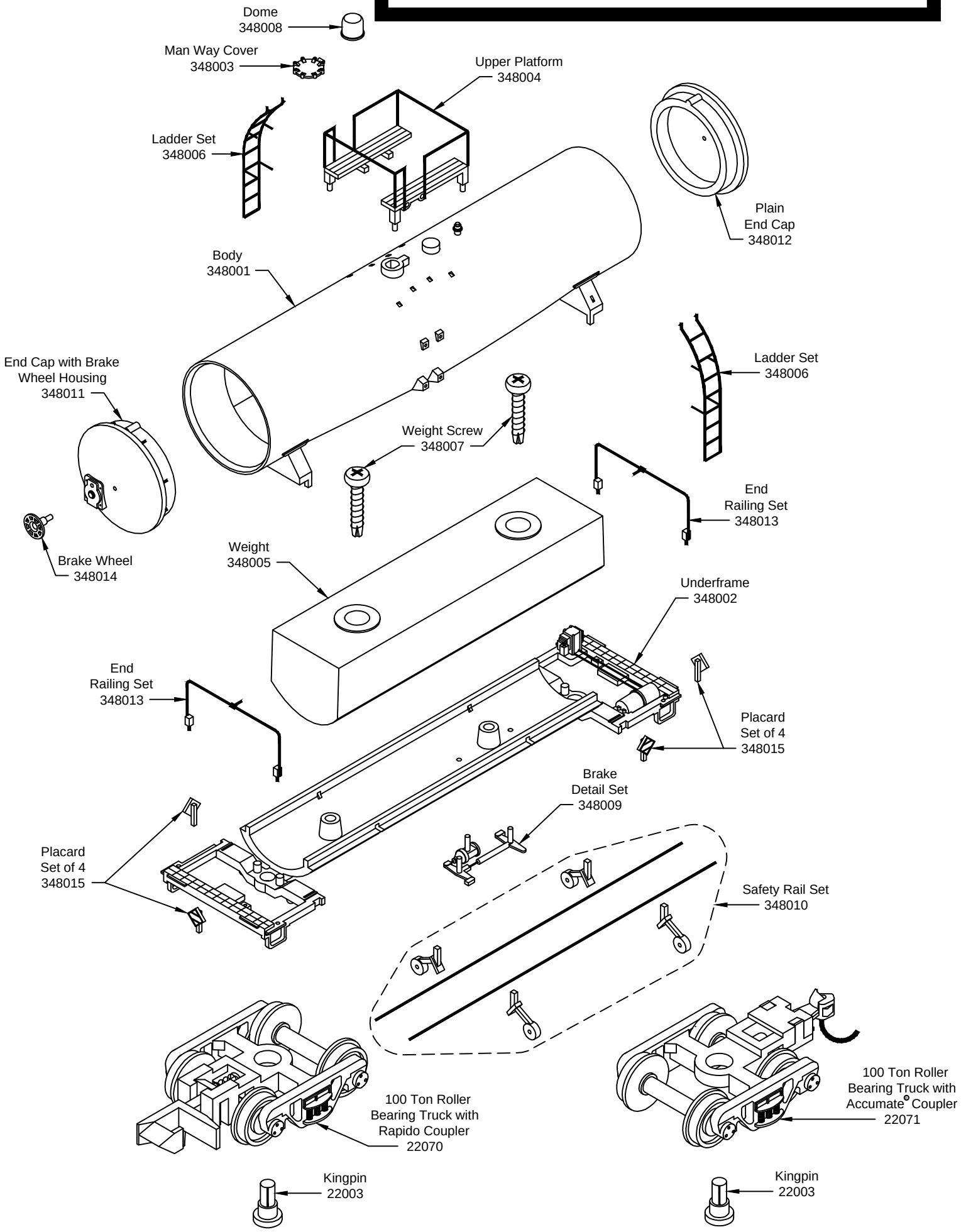#34800 SERIES - N KAOLIN TANK CAR