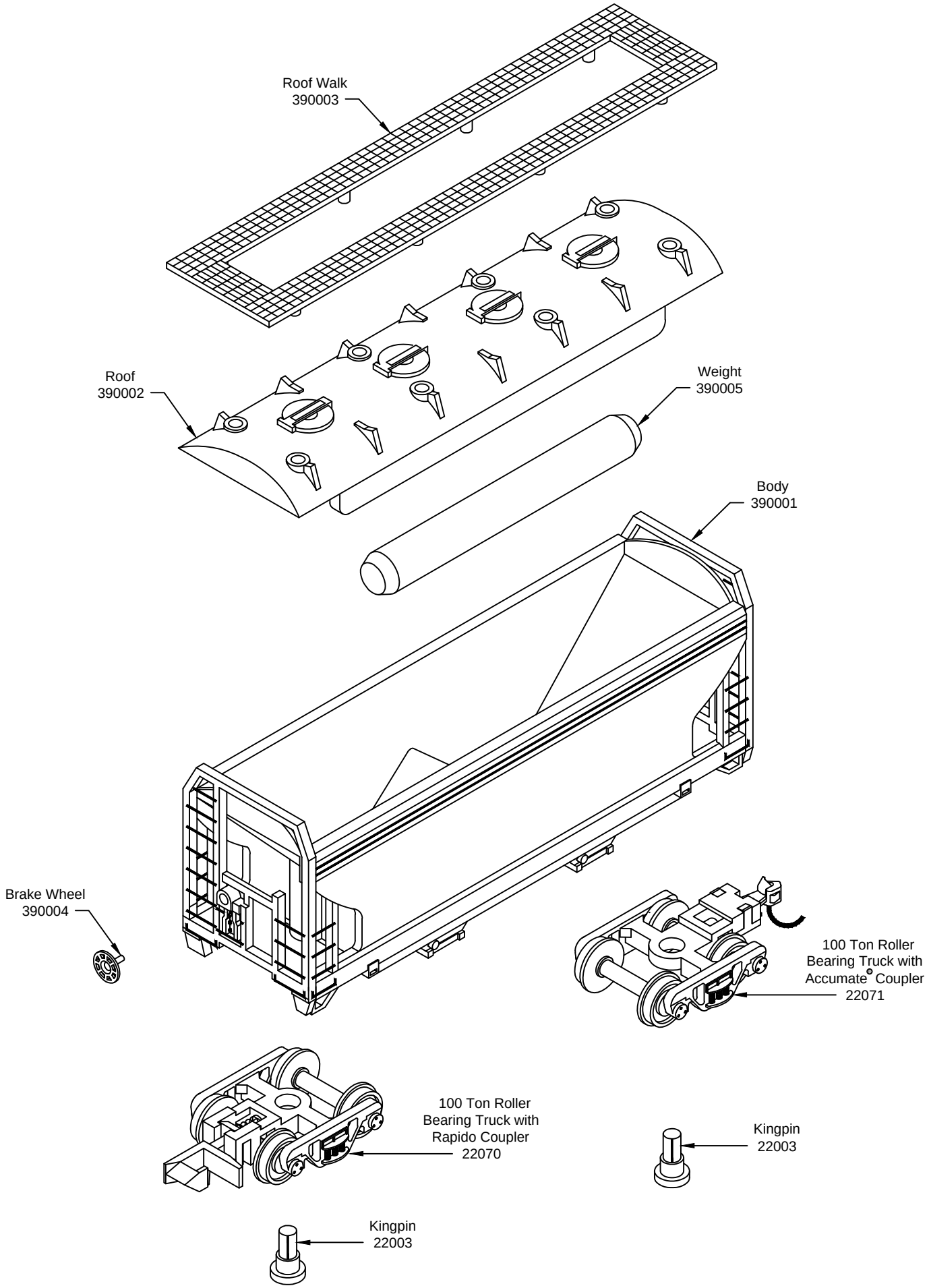#3900 SERIES - N ACF 2-BAY CENTERFLOW