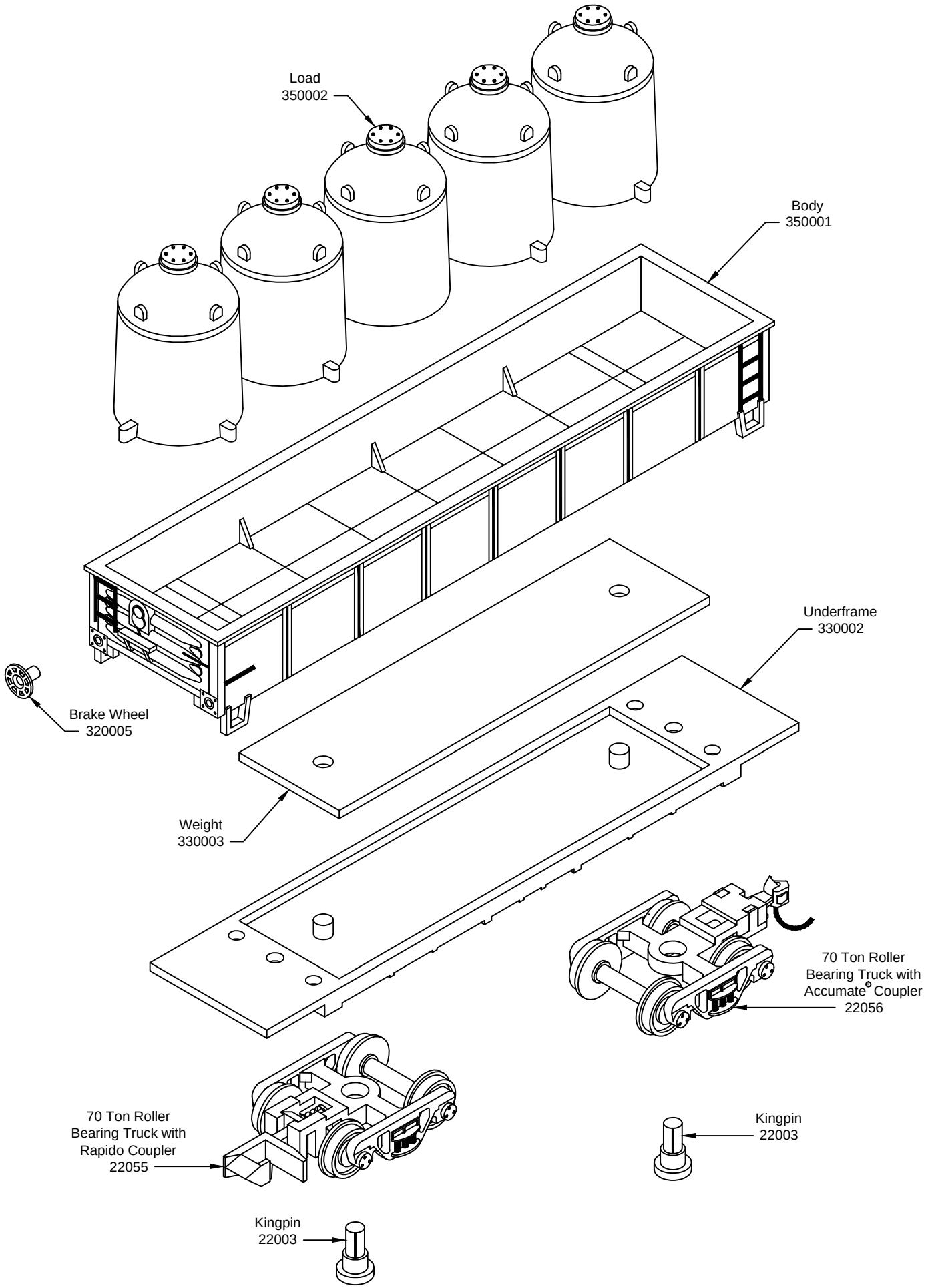#3500 SERIES - N 42' GONDOLA WITH CONTAINERS