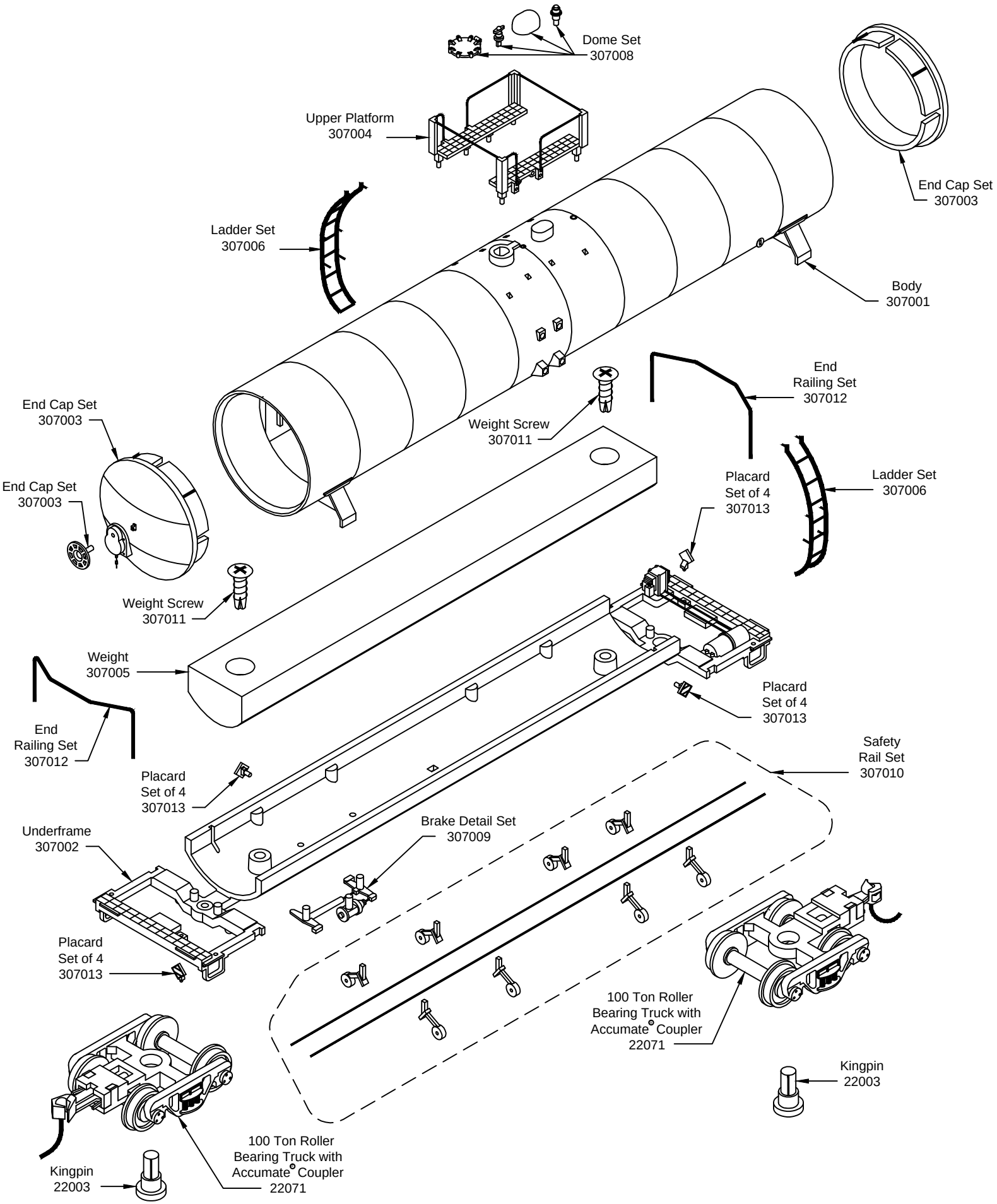#30700 SERIES - N 23,500 GALLON TANK CAR