N FAIRBANKS-MORSE TRAINMASTER DIESEL LOCO - CHINA

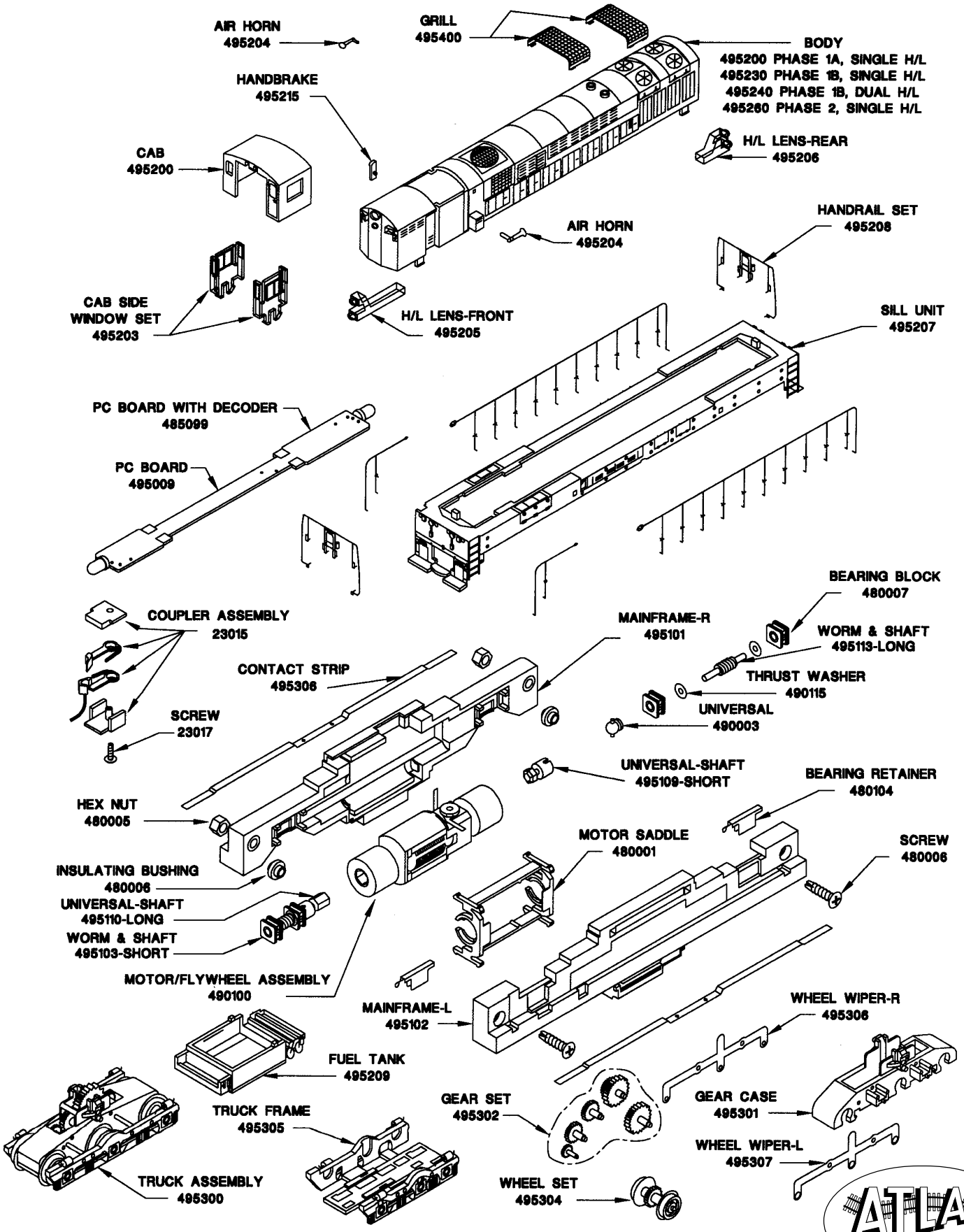

ATLAS MODEL RAILROAD CO., INC.